248 WEST 12TH STREET
NEW YORK, NEW YORK 10014
Tax Block: 615; Tax Lot: 23

PUBLIC HEARING APPLICATION

REPLACE EXISTING METAL CAP LINTELS AND SILLS

MAP SHOWING LOCATION OF 248 WEST 12TH STREET WITHIN THE CONTEXT OF THE BLOCK

SHEETS IN PRESENTATION:

LPC-000 - COVER PAGE
LPC-001 - LOCATION
LPC-000 - TAX PHOTOS
LPC-200 - FRONT ELEVATIONS
LPC-500 - LINTEL & SILL DETAIL
LPC-501 - CONDITIONS ASSESSMENT: LINTELS & SILLS
LPC-600 - BLOCK PHOTOS

APPLICANT :

HPL

HPL Engineering P.C.

201 46th STREET, 1st FLOOR,
BROOKLYN, NY 11220
Tel: (718) 439-6600; FAX: (718)439-6688
EMAIL: INFO @ HPLENGINEERING.COM

SD DESIGN STUDIO LLC
BUILDING SOLUTIONS & SERVICES

43-04 MAIN STREET | FL 1
FLUSHING NY 11355
TEL:718-924-2750/2751
EMAIL:INFO@SDBUILDINGS.CO

WARNING: IT IS A VIOLATION OF NYS EDUCATION LAW ARTICLES 145 & 147 FOR ANY PERSON, UNLESS ACTING UNDER THE DIRECTION OF A LICENSED ARCHITECT/ENGINEER. TO ALTER AN ITEM IN ANY WAY.

PROJECT INFORMATION:

HOUSE NUMBER	248
STREET	WEST 12TH STREET
BOROUGH	MANHATTAN
ZIP CODE	10014
BLOCK	615
LOT	23
BIN	
CB NO.	

REVISIONS:

REV. NO.	DATE

THE REPRODUCTION OF THIS DRAWING OR THE USE OF IDEAS AND ARRANGEMENTS INDICATED ON THIS DRAWING WITHOUT THE WRITTEN APPROVAL OF THIS OFFICE IS PROHIBITED. WRITTEN DIMENSIONS TAKE PRECEDENCE OVER SCALED DIMENSIONS. THE CONTRACTOR SHALL VERIFY DIMENSIONS AND CONDITIONS AT THE JOB AND REPORT DISCREPANCIES TO THE ARCHITECT/ ENGINEER PRIOR TO THE START OF THE WORK.

PROJECT:

LPC APPLICATION
248 WEST 12TH STREET
MANHATTAN, NY 10014

DRAWING TITLE:

COVER PAGE

DATE: 03/31/2026
PROJECT NO:
DRAWN BY: KOS
CHECK BY: HPL
DWG NO:
FILE

SEAL AND SIGNATURE:

STATE OF NEW YORK · FRANK (FENG) HUANG · 083189 · LICENSED PROFESSIONAL ENGINEER

DOB EMPLOYEE STAMPS AND SIGNATURES:

DOB NOW JOB NO:

INITIAL FILING:

Greenwich Village Historic District | LP-0489

NYC Landmarks Preservation Commission

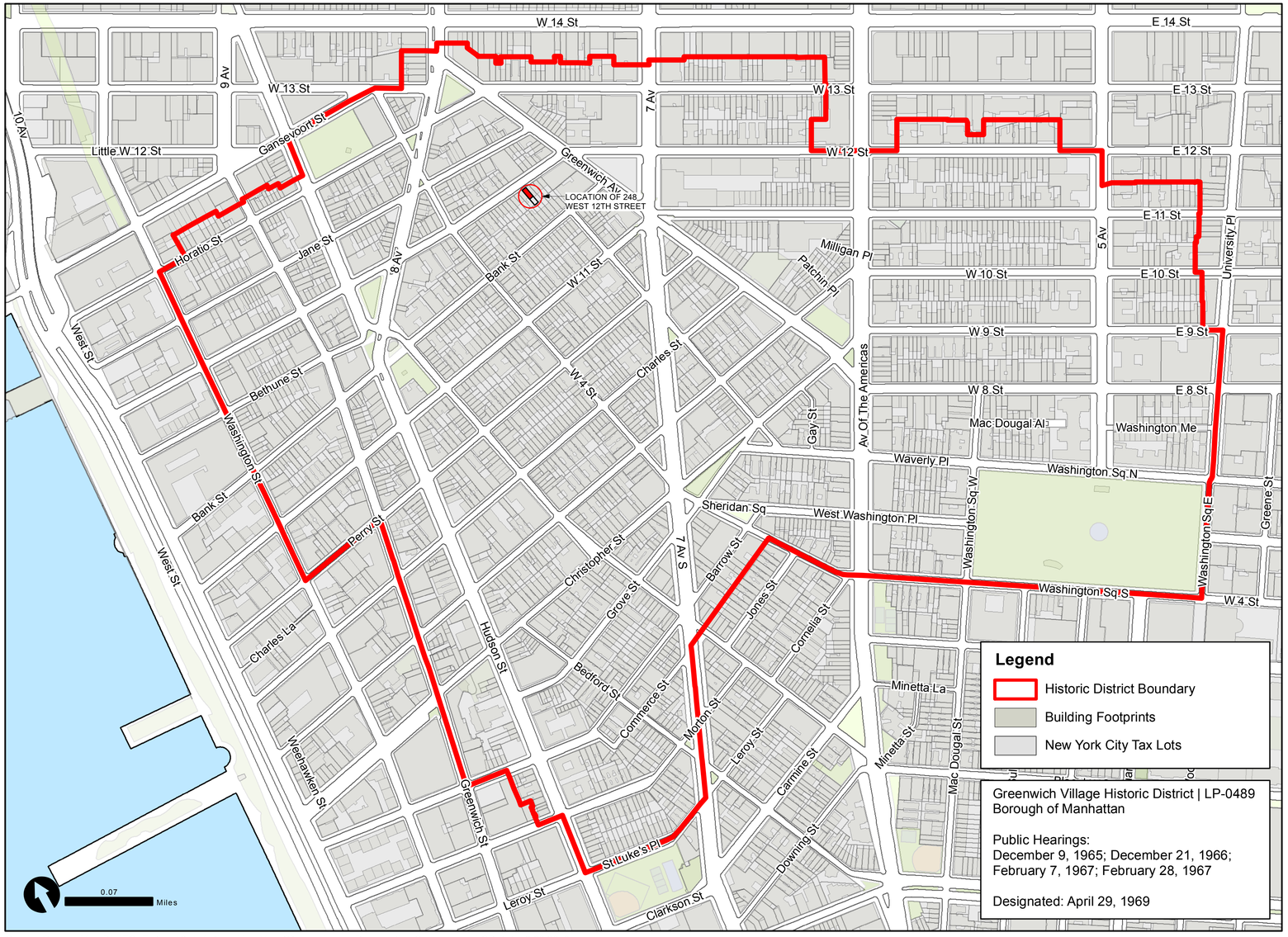

Legend

- Historic District Boundary
- Building Footprints
- New York City Tax Lots

Greenwich Village Historic District | LP-0489
Borough of Manhattan

Public Hearings:
December 9, 1965; December 21, 1966;
February 7, 1967; February 28, 1967

Designated: April 29, 1969

Graphic Source: Map PLUTO, Edition 18v1, Author: New York City Landmarks Preservation Commission, LCR Date: 2.20.2019

HISTORIC MAP OF GREENWICH VILLAGE SHOWING THE LOCATION OF 59 MORTON STREET

APPLICANT :

HPL

HPL Engineering P.C.

201 46th STREET, 1st FLOOR,
BROOKLYN, NY 11220
Tel: (718) 439-6600; FAX: (718)439-6688
EMAIL: INFO @ HPLENGINEERING.COM

SD DESIGN STUDIO LLC
BUILDING SOLUTIONS & SERVICES

43-04 MAIN STREET | FL 1
FLUSHING NY 11355
TEL:718-924-2750/2751
EMAIL:INFO@SDBUILDINGS.CO

WARNING: IT IS A VIOLATION OF NYS EDUCATION LAW ARTICLES 145 & 147 FOR ANY PERSON, UNLESS ACTING UNDER THE DIRECTION OF A LICENSED ARCHITECT/ENGINEER TO ALTER AN ITEM IN ANY WAY.

PROJECT INFORMATION:

HOUSE NUMBER	248
STREET	WEST 12TH STREET
BOROUGH	MANHATTAN
ZIP CODE	10014
BLOCK	615
LOT	23
BIN	
CB NO.	

REVISIONS:

REV. NO.	DATE

THE REPRODUCTION OF THIS DRAWING OR THE USE OF IDEAS AND ARRANGEMENTS INDICATED ON THIS DRAWING WITHOUT THE WRITTEN APPROVAL OF THIS OFFICE IS PROHIBITED. WRITTEN DIMENSIONS TAKE PRECEDENCE OVER SCALED DIMENSIONS. THE CONTRACTOR SHALL VERIFY DIMENSIONS AND CONDITIONS AT THE JOB AND REPORT DISCREPANCIES TO THE ARCHITECT/ ENGINEER PRIOR TO THE START OF THE WORK.

PROJECT:

LPC APPLICATION
248 WEST 12TH STREET
MANHATTAN, NY 10014

DRAWING TITLE:

LOCATION

DATE: 03/31/2026
PROJECT NO:
DRAWN BY: KOS
CHECK BY: HPL
DWG NO: LPC-001
FILE

SEAL AND SIGNATURE:

STATE OF NEW YORK · FAN (FENG) HUANG · 089189 · LICENSED PROFESSIONAL ENGINEER

DOB EMPLOYEE STAMPS AND SIGNATURES:

DOB NOW JOB NO:

INITIAL FILING:

O 1
F 4

1940S HISTORIC TAX PHOTO OF THE FRONT FACADE

2025 EXISTING CONDITIONS PHOTO OF THE FRONT FACADE

APPLICANT :

HPL

HPL Engineering P.C.

201 46th STREET, 1st FLOOR,
BROOKLYN, NY 11220
Tel: (718) 439-6600; FAX: (718)439-6688
EMAIL: INFO @ HPLENGINEERING.COM

SD DESIGN STUDIO LLC
BUILDING SOLUTIONS & SERVICES

43-04 MAIN STREET | FL 1
FLUSHING NY 11355
TEL:718-924-2750/2751
EMAIL:INFO@SDBUILDINGS.CO

WARNING: IT IS A VIOLATION OF NYS EDUCATION LAW ARTICLES 145 & 147 FOR ANY PERSON, UNLESS ACTING UNDER THE DIRECTION OF A LICENSED ARCHITECT/ENGINEER. TO ALTER AN ITEM IN ANY WAY.

PROJECT INFORMATION:

HOUSE NUMBER	248
STREET	WEST 12TH STREET
BOROUGH	MANHATTAN
ZIP CODE	10014
BLOCK	615
LOT	23
BIN	
CB NO.	

REVISIONS:

REV. NO.	DATE

THE REPRODUCTION OF THIS DRAWING OR THE USE OF IDEAS AND ARRANGEMENTS INDICATED ON THIS DRAWING WITHOUT THE WRITTEN APPROVAL OF THIS OFFICE IS PROHIBITED. WRITTEN DIMENSIONS TAKE PRECEDENCE OVER SCALED DIMENSIONS. THE CONTRACTOR SHALL VERIFY DIMENSIONS AND CONDITIONS AT THE JOB AND REPORT DISCREPANCIES TO THE ARCHITECT/ ENGINEER PRIOR TO THE START OF THE WORK.

PROJECT:

LPC APPLICATION
248 WEST 12TH STREET
MANHATTAN, NY 10014

DRAWING TITLE:

HISTORIC PHOTOS

DATE: 03/31/2026

PROJECT NO:

DRAWN BY: KOS

CHECK BY: HPL

DWG NO: LPC-002

FILE

SEAL AND SIGNATURE:

STATE OF NEW YORK
FRANT FENGT HUANG
083189
LICENSED PROFESSIONAL ENGINEER

DOB EMPLOYEE STAMPS AND SIGNATURES:

DOB NOW JOB NO:

INITIAL FILING:

O 1
F 4

BROWNSTONE SAMPLE

BROWNSTONE STUCCO RECIPE:

Slurry coat :
Apply a thin slurry coat with a brush and rub vigorously into the surface. The slurry coat consists of the following mix, by volume:
- 1 part white Portland cement
- 2 parts type S lime
- 6 parts sand
- Mix with water

Scratch coat:
The first scratch coat must be pressed into the slurry coat while the slurry is still moist. Each scratch coat must be scored before initial drying to provide a key for following coats. No coat should exceed 3/8 inch in thickness. Allow 2-4 hours between scratch coat applications. The scratch coat consists of the following mix, by volume:
- 1 part white Portland cement
- 1 part type S lime
- 6 parts sand
- Water for mixing

Finish coat:
The finish coat is applied once the patch has been built up to the required thickness. This final coat is the only coat formulated to match the color and texture of the stone being repaired. The finish coat consists of the following mix, by volume:
- 1 part white Portland cement
- 1 part type S lime
- 2–3 parts sand
- 3–4 parts crushed stone (of the same type being resurfaced)
- Dry pigments
- Water for mixing

All measurements are parts by volume. All ingredients must be combined dry then mixed with potable water. Use dry pigments (natural or synthetic stable oxide pigments) when crushed stone is not a sufficient color match.

PHOTO OF EXISTING FRONT ELEVATION

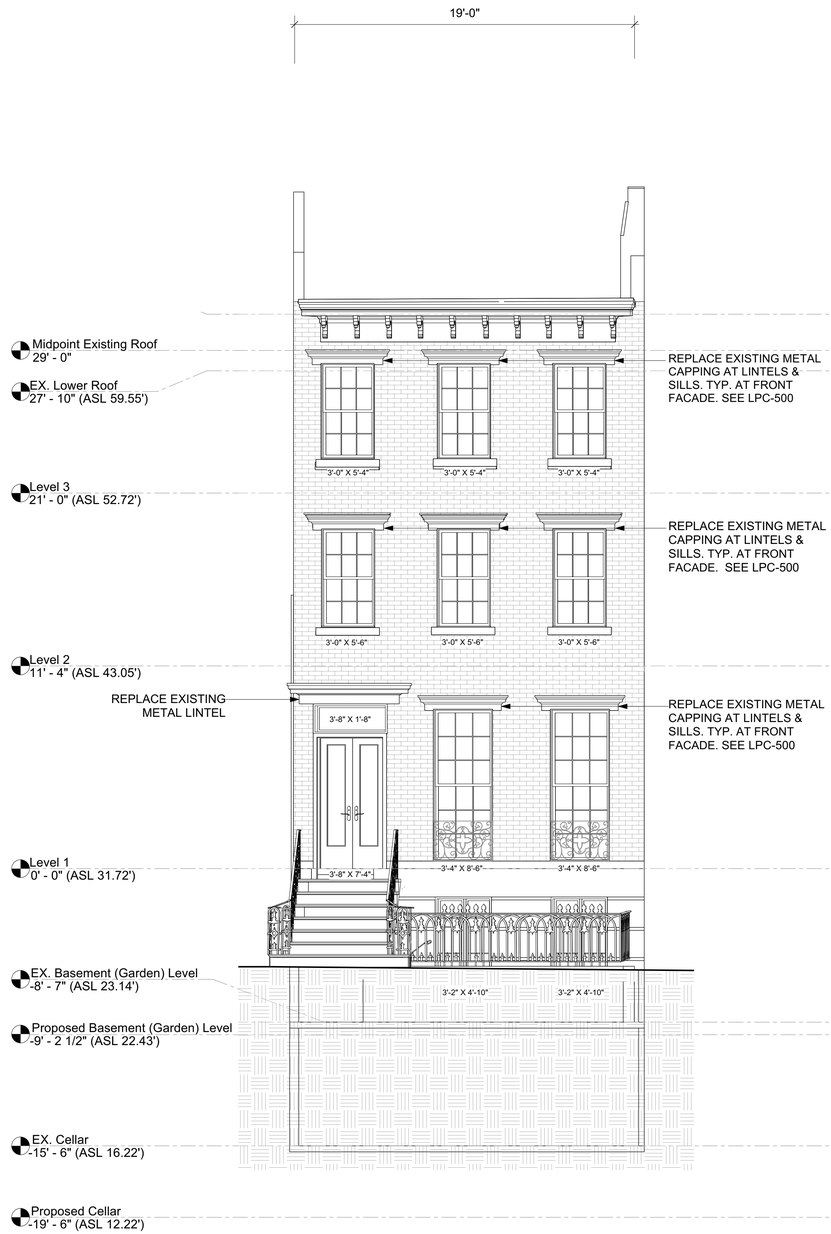

1 EXISTING FRONT ELEVATION
1/4" = 1'-0"

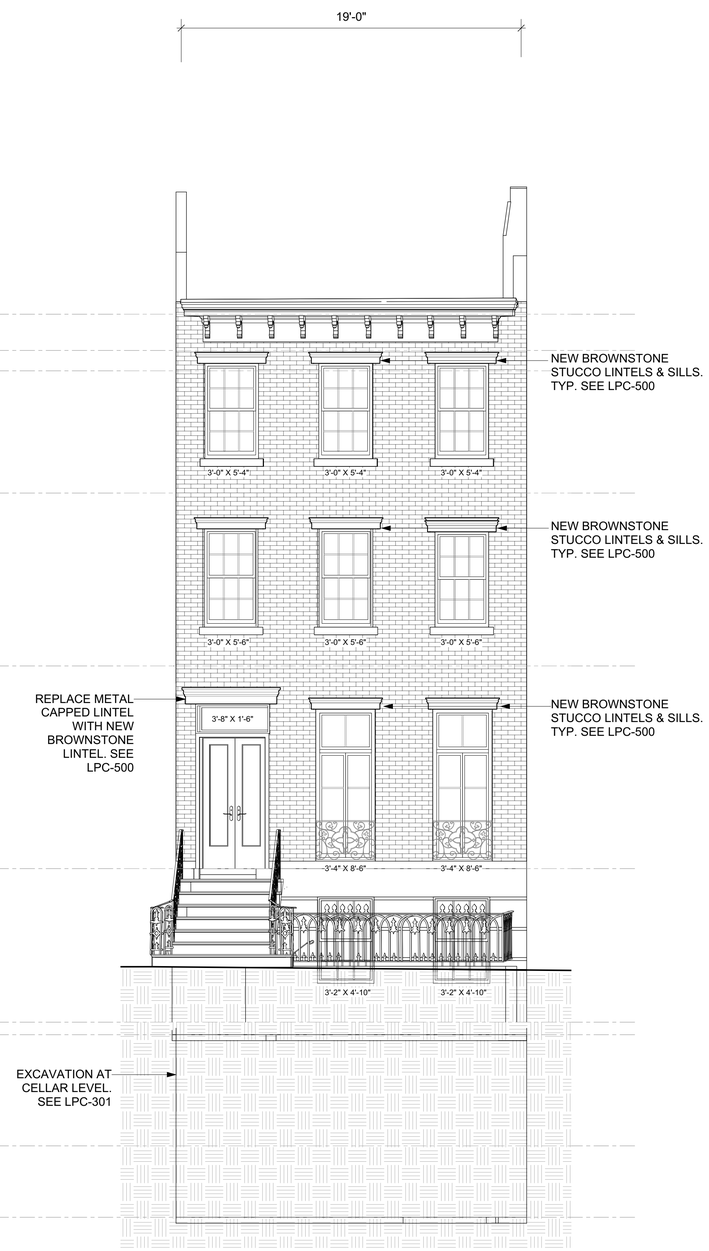

2 PROPOSED FRONT ELEVATION
1/4" = 1'-0"

APPLICANT :

HPL

HPL Engineering P.C.

201 46th STREET, 1st FLOOR,
BROOKLYN, NY 11220
Tel: (718) 439-6600; FAX: (718)439-6688
EMAIL: INFO @ HPLENGINEERING.COM

SD DESIGN STUDIO LLC
BUILDING SOLUTIONS & SERVICES

43-04 MAIN STREET | FL 1
FLUSHING NY 11355
TEL:718-924-2750/2751
EMAIL:INFO@SDBUILDINGS.CO

WARNING: IT IS A VIOLATION OF NYS EDUCATION LAW ARTICLES 145 & 147 FOR ANY PERSON, UNLESS ACTING UNDER THE DIRECTION OF A LICENSED ARCHITECT/ENGINEER. TO ALTER AN ITEM IN ANY WAY.

PROJECT INFORMATION:

HOUSE NUMBER	248
STREET	WEST 12TH STREET
BOROUGH	MANHATTAN
ZIP CODE	10014
BLOCK	615
LOT	23
BIN	
CB NO.	

REVISIONS:

REV. NO.	DATE

THE REPRODUCTION OF THIS DRAWING OR THE USE OF IDEAS AND ARRANGEMENTS INDICATED ON THIS DRAWING WITHOUT THE WRITTEN APPROVAL OF THIS OFFICE IS PROHIBITED. WRITTEN DIMENSIONS TAKE PRECEDENCE OVER SCALED DIMENSIONS. THE CONTRACTOR SHALL VERIFY DIMENSIONS AND CONDITIONS AT THE JOB AND REPORT DISCREPANCIES TO THE ARCHITECT/ ENGINEER PRIOR TO THE START OF THE WORK.

PROJECT:

LPC APPLICATION
248 WEST 12TH STREET
MANHATTAN, NY 10014

DRAWING TITLE:

FRONT ELEVATIONS

DATE: 03/31/2026
PROJECT NO:
DRAWN BY: KOS
CHECK BY: HPL
DWG NO: LPC-200
FILE

SEAL AND SIGNATURE:

STATE OF NEW YORK · FRANK FENGT HUANG · 083189 · LICENSED PROFESSIONAL ENGINEER

DOB EMPLOYEE STAMPS AND SIGNATURES:

DOB NOW JOB NO:

INITIAL FILING:

O 1
F 4

HISTORIC PHOTO SHOWING ORIGINAL BROWNSTONE SILLS & LINTELS

PHOTO SHOWING EXISTING METAL SILLS & LINTELS

BROWNSTONE STUCCO SAMPLE - TO MATCH EXISTING CONDITIONS

BROWNSTONE STUCCO RECIPE:

Slurry coat :
Apply a thin slurry coat with a brush and rub vigorously into the surface. The slurry coat consists of the following mix, by volume:
- 1 part white Portland cement
- 2 parts type S lime
- 6 parts sand
- Mix with water

Scratch coat:
The first scratch coat must be pressed into the slurry coat while the slurry is still moist. Each scratch coat must be scored before initial drying to provide a key for following coats. No coat should exceed 3/8 inch in thickness. Allow 2-4 hours between scratch coat applications. The scratch coat consists of the following mix, by volume:
- 1 part white Portland cement
- 1 part type S lime
- 6 parts sand
- Water for mixing

Finish coat:
The finish coat is applied once the patch has been built up to the required thickness. This final coat is the only coat formulated to match the color and texture of the stone being repaired. The finish coat consists of the following mix, by volume:
- 1 part white Portland cement
- 1 part type S lime
- 2–3 parts sand
- 3–4 parts crushed stone (of the same type being resurfaced)
- Dry pigments
- Water for mixing

All measurements are parts by volume. All ingredients must be combined dry then mixed with potable water. Use dry pigments (natural or synthetic stable oxide pigments) when crushed stone is not a sufficient color match.

NOTE: DETAIL SHOPS CAN BE PROVIDED TO LPC POST APPROVAL UNDER SHOPS/ SAMPLES APPLICATION

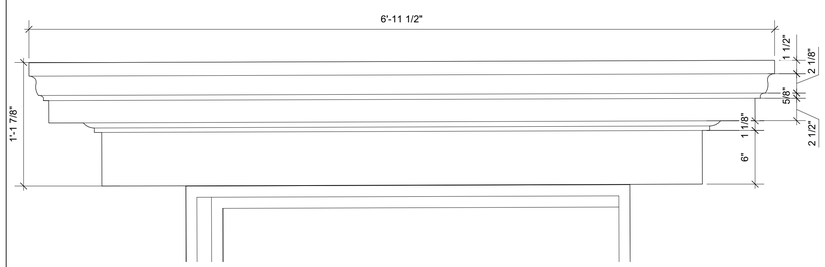

1 EXISTING DOOR HEADER ELEVATION
1 1/2" = 1'-0"

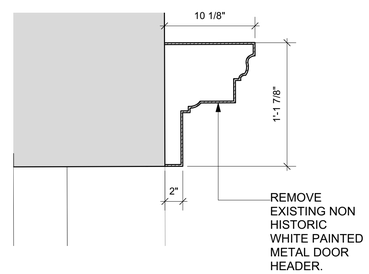

2 EXISTING DOOR HEADER PROFILE
1 1/2" = 1'-0"

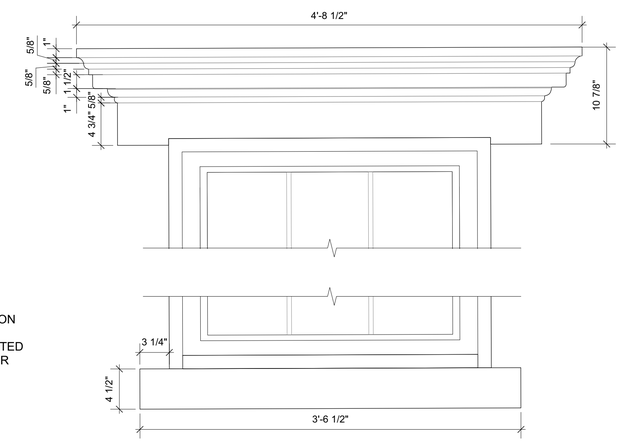

3 EXISTING WINDOW LINTEL & SILL
1 1/2" = 1'-0"

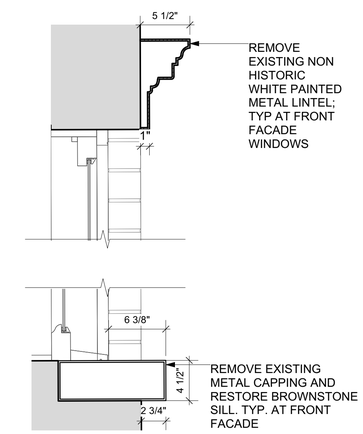

4 EXISTING LINTEL & SILL PROFILE
1 1/2" = 1'-0"

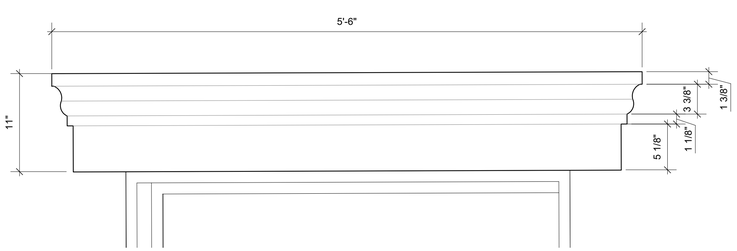

5 RESTORED DOOR HEADER ELEVATION
1 1/2" = 1'-0"

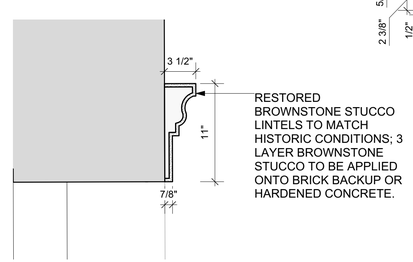

6 RESTORED DOOR HEADER PROFILE
1 1/2" = 1'-0"

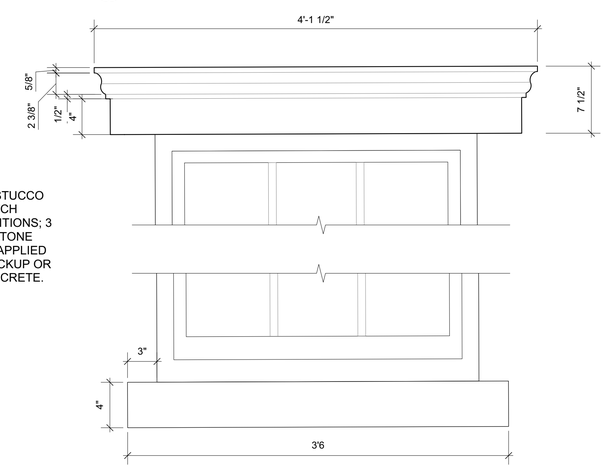

7 RESTORED WINDOW LINTAL & SILL
1 1/2" = 1'-0"

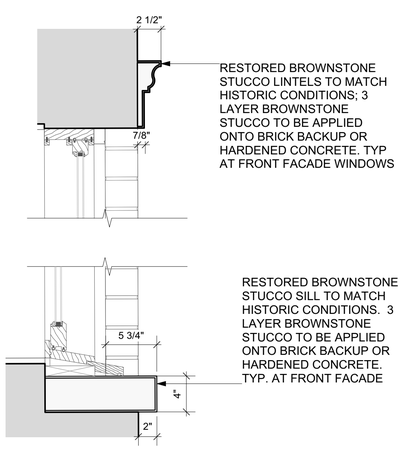

8 RESTORED LINTEL & SILL PROFILE
1 1/2" = 1'-0"

APPLICANT :

HPL

HPL Engineering P.C.

201 46th STREET, 1st FLOOR,
BROOKLYN, NY 11220
Tel: (718) 439-6600; FAX: (718)439-6688
EMAIL: INFO @ HPLENGINEERING.COM

SD DESIGN STUDIO LLC
BUILDING SOLUTIONS & SERVICES

43-04 MAIN STREET | FL 1
FLUSHING NY 11355
TEL:718-924-2750/2751
EMAIL:INFO@SDBUILDINGS.CO

WARNING: IT IS A VIOLATION OF NYS EDUCATION LAW ARTICLES 145 & 147 FOR ANY PERSON, UNLESS ACTING UNDER THE DIRECTION OF A LICENSED ARCHITECT/ENGINEER. TO ALTER AN ITEM IN ANY WAY.

PROJECT INFORMATION:

HOUSE NUMBER	248
STREET	WEST 12TH STREET
BOROUGH	MANHATTAN
ZIP CODE	10014
BLOCK	615
LOT	23
BIN	
CB NO.	

REVISIONS:

REV. NO.	DATE

THE REPRODUCTION OF THIS DRAWING OR THE USE OF IDEAS AND ARRANGEMENTS INDICATED ON THIS DRAWING WITHOUT THE WRITTEN APPROVAL OF THIS OFFICE IS PROHIBITED. WRITTEN DIMENSIONS TAKE PRECEDENCE OVER SCALED DIMENSIONS. THE CONTRACTOR SHALL VERIFY DIMENSIONS AND CONDITIONS AT THE JOB AND REPORT DISCREPANCIES TO THE ARCHITECT/ ENGINEER PRIOR TO THE START OF THE WORK.

PROJECT:
LPC APPLICATION
248 WEST 12TH STREET
MANHATTAN, NY 10014

DRAWING TITLE:

SILLS & LINTEL DETAILS

DATE: 03/31/2026
PROJECT NO:
DRAWN BY: KOS
CHECK BY: HPL
DWG NO: LPC-500
FILE

SEAL AND SIGNATURE:

STATE OF NEW YORK · FRANK (FENG) HUANG · 089189 · LICENSED PROFESSIONAL ENGINEER

DOB EMPLOYEE STAMPS AND SIGNATURES:

DOB NOW JOB NO:

INITIAL FILING:

O 1
F 4

SAMPLE DETAIL PHOTO OF METAL CAPPED SILL AT THE 2ND FLOOR WINDOW

SAMPLE DETAIL PHOTO OF METAL CAPPED SILL AT THE 1ST FLOOR WINDOW

SAMPLE DETAIL PHOTO OF METAL CAPPED SILL AT THE 1ST FLOOR WINDOW

SAMPLE DETAIL PHOTO OF METAL CAPPED SILL AT THE 1ST FLOOR WINDOW

CONDITIONS ASSESSMENT : SILLS

A VISUAL ASSESSMENT OF THE METAL CAPPED SILLS AT 248 W12TH STREET INDICATE MODERATE DETERIORATION CONSISTENT WITH LONG TERN EXPOSURE TO THE ELEMENTS AND DEFERRED MAINTENANCE. THERE IS ALSO EVIDENCE OF PEELING AND DELAMINATING PAINT/ COATING WITH CONDITIONS APPEARING WORSE ON THE 1ST FLOOR.

NO EVIDENCE OF PREEXISTING BROWNSTONE UNDEREATH METAL CAPS.

THERE WERE SIGNIFICANT TRENDS IN EARLY 20TH CENTURY NYC OF REPLACING OR CAPPING ORIGINAL BROWNSTONE LINTELS & SILLS. LOOKING AT THE REST OF THE BLOCK, IT IS LIKELY THAT THE ORIGINAL LINTELS AND SILLS WERE BROWNSTONE HERE WITH THE METAL CAPS LIKELY INSTALLED BETWEEN 1899 -1940.

PHOTO SHOWING EXISTING METAL CAPPING AT FRONT WINDOW LINTELS. CAPPING TO BE REMOVED AND ORIGINAL BROWNSTONE LINTELS TO BE RESTORED. TYP.

DETAIL PHOTO OF METAL CAPPING AT 1ST FLOOR WINDOW

DETAIL PHOTO OF METAL CAPPING AT 1ST FLOOR WINDOW

SAMPLE DETAIL PHOTO OF METAL CAPPING AT THE PARLOR FLOOR WINDOW

SAMPLE DETAIL PHOTO OF METAL CAPPING AT THE PARLOR FLOOR WINDOW

SAMPLE DETAIL PHOTO OF METAL CAPPING AT ENTRY DOOR

CONDITIONS ASSESSMENT : LINTELS

A VISUAL ASSESSMENT OF THE METAL CAPPED LINTELS AT 248 W12TH STREET INDICATE SEVERE DETERIORATION CONSISTENT WITH LONG TERN EXPOSURE TO THE ELEMENTS AND DEFERRED MAINTENANCE. SIGNIFICANT CORROSION AND RUST STAINING IS VISIBLE PARTICULARLY ON THE METAL CAPPED LINTEL CAPS AT THE LOWER FLOORS. THERE IS ALSO EVIDENCE OF PEELING AND DELAMINATING PAINT/ COATING ON THE LINTELS WITH CONDITIONS APPEARING WORSE ON THE PARLOR AND 1ST FLOOR.

APPLICANT :

HPL

HPL Engineering P.C.

201 46th STREET, 1st FLOOR,
BROOKLYN, NY 11220
Tel: (718) 439-6600; FAX: (718)439-6688
EMAIL: INFO @ HPLENGINEERING.COM

SD DESIGN STUDIO LLC
BUILDING SOLUTIONS & SERVICES
43-04 MAIN STREET | FL 1
FLUSHING NY 11355
TEL:718-924-2750/2751
EMAIL:INFO@SDBUILDINGS.CO

WARNING: IT IS A VIOLATION OF NYS EDUCATION LAW ARTICLES 145 & 147 FOR ANY PERSON, UNLESS ACTING UNDER THE DIRECTION OF A LICENSED ARCHITECT/ENGINEER. TO ALTER AN ITEM IN ANY WAY.

PROJECT INFORMATION:

HOUSE NUMBER	248
STREET	WEST 12TH STREET
BOROUGH	MANHATTAN
ZIP CODE	10014
BLOCK	615
LOT	23
BIN	
CB NO.	

REVISIONS:

REV. NO.	DATE

THE REPRODUCTION OF THIS DRAWING OR THE USE OF IDEAS AND ARRANGEMENTS INDICATED ON THIS DRAWING WITHOUT THE WRITTEN APPROVAL OF THIS OFFICE IS PROHIBITED. WRITTEN DIMENSIONS TAKE PRECEDENCE OVER SCALED DIMENSIONS. THE CONTRACTOR SHALL VERIFY DIMENSIONS AND CONDITIONS AT THE JOB AND REPORT DISCREPANCIES TO THE ARCHITECT/ ENGINEER PRIOR TO THE START OF THE WORK.

PROJECT:

LPC APPLICATION
248 WEST 12TH STREET
MANHATTAN, NY 10014

DRAWING TITLE:

SILLS & LINTEL CONDITIONS ASSESSMENT

DATE: 03/31/2026
PROJECT NO:
DRAWN BY: KOS
CHECK BY: HPL
DWG NO: LPC-501
FILE

SEAL AND SIGNATURE:

STATE OF NEW YORK
FRANT FENGT HUANG
083189
LICENSED PROFESSIONAL ENGINEER

DOB EMPLOYEE STAMPS AND SIGNATURES:

DOB NOW JOB NO:

INITIAL FILING:

O 1
F 4

246 WEST 12TH STREET - LPC-19-34207; APPROVED THE REMOVAL OF METAL CAPS WITH BROWNSTONE REPLACEMENTS

244 WEST 12TH STREET - EVIDENCE OF BROWNSTONE LINTELS AND SILLS IN THE ROW

250 WEST 12TH STREET - EVIDENCE OF BROWNSTONE LINTELS AND SILLS IN THE ROW

240 WEST 12TH STREET - EVIDENCE OF BROWNSTONE LINTELS AND SILLS IN THE ROW

248 WEST 12TH STREET IS THE ONLY HOUSE ON THE BLOCK WITH METAL CAPPED SILLS AND LINTELS

LIST OF TOWNHOUSES WITH *BROWNSTONE* LINTELS AND SILLS ON BLOCK:

- 240 WEST 12TH STREET
- 242 WEST 12TH STREET
- 244 WEST 12TH STREET
- 246 WEST 12TH STREET
- 250 WEST 12TH STREET
- 252 WEST 12TH STREET
- 254 WEST 12TH STREET
- 256 WEST 12TH STREET
- 260 WEST 12TH STREET
- 262 WEST 12TH STREET
- 266 WEST 12TH STREET
- 237 WEST 12TH STREET
- 239 WEST 12TH STREET
- 241 WEST 12TH STREET
- 243 WEST 12TH STREET
- 277 WEST 12TH STREET
- 279 WEST 12TH STREET

APPLICANT :

HPL

HPL Engineering P.C.

201 46th STREET, 1st FLOOR,
BROOKLYN, NY 11220
Tel: (718) 439-6600; FAX: (718)439-6688
EMAIL: INFO @ HPLENGINEERING.COM

SD DESIGN STUDIO LLC
BUILDING SOLUTIONS & SERVICES
43-04 MAIN STREET | FL 1
FLUSHING NY 11355
TEL:718-924-2750/2751
EMAIL:INFO@SDBUILDINGS.CO

WARNING: IT IS A VIOLATION OF NYS EDUCATION LAW ARTICLES 145 & 147 FOR ANY PERSON, UNLESS ACTING UNDER THE DIRECTION OF A LICENSED ARCHITECT/ENGINEER. TO ALTER AN ITEM IN ANY WAY.

PROJECT INFORMATION:

HOUSE NUMBER	248
STREET	WEST 12TH STREET
BOROUGH	MANHATTAN
ZIP CODE	10014
BLOCK	615
LOT	23
BIN	
CB NO.	

REVISIONS:

REV. NO.	DATE

THE REPRODUCTION OF THIS DRAWING OR THE USE OF IDEAS AND ARRANGEMENTS INDICATED ON THIS DRAWING WITHOUT THE WRITTEN APPROVAL OF THIS OFFICE IS PROHIBITED. WRITTEN DIMENSIONS TAKE PRECEDENCE OVER SCALED DIMENSIONS. THE CONTRACTOR SHALL VERIFY DIMENSIONS AND CONDITIONS AT THE JOB AND REPORT DISCREPANCIES TO THE ARCHITECT/ ENGINEER PRIOR TO THE START OF THE WORK.

PROJECT:

LPC APPLICATION
248 WEST 12TH STREET
MANHATTAN, NY 10014

DRAWING TITLE:

BLOCK PHOTOS

DATE: 03/31/2026

PROJECT NO:

DRAWN BY: KOS

CHECK BY: HPL

DWG NO: LPC-600

FILE

SEAL AND SIGNATURE:

STATE OF NEW YORK · FRANK FENGI HUANG · 082169 · LICENSED PROFESSIONAL ENGINEER

DOB EMPLOYEE STAMPS AND SIGNATURES:

DOB NOW JOB NO:

INITIAL FILING:

O 1
F 4