50 E 7th St
BUS ONLY
N

JOB No.: 06-25111E

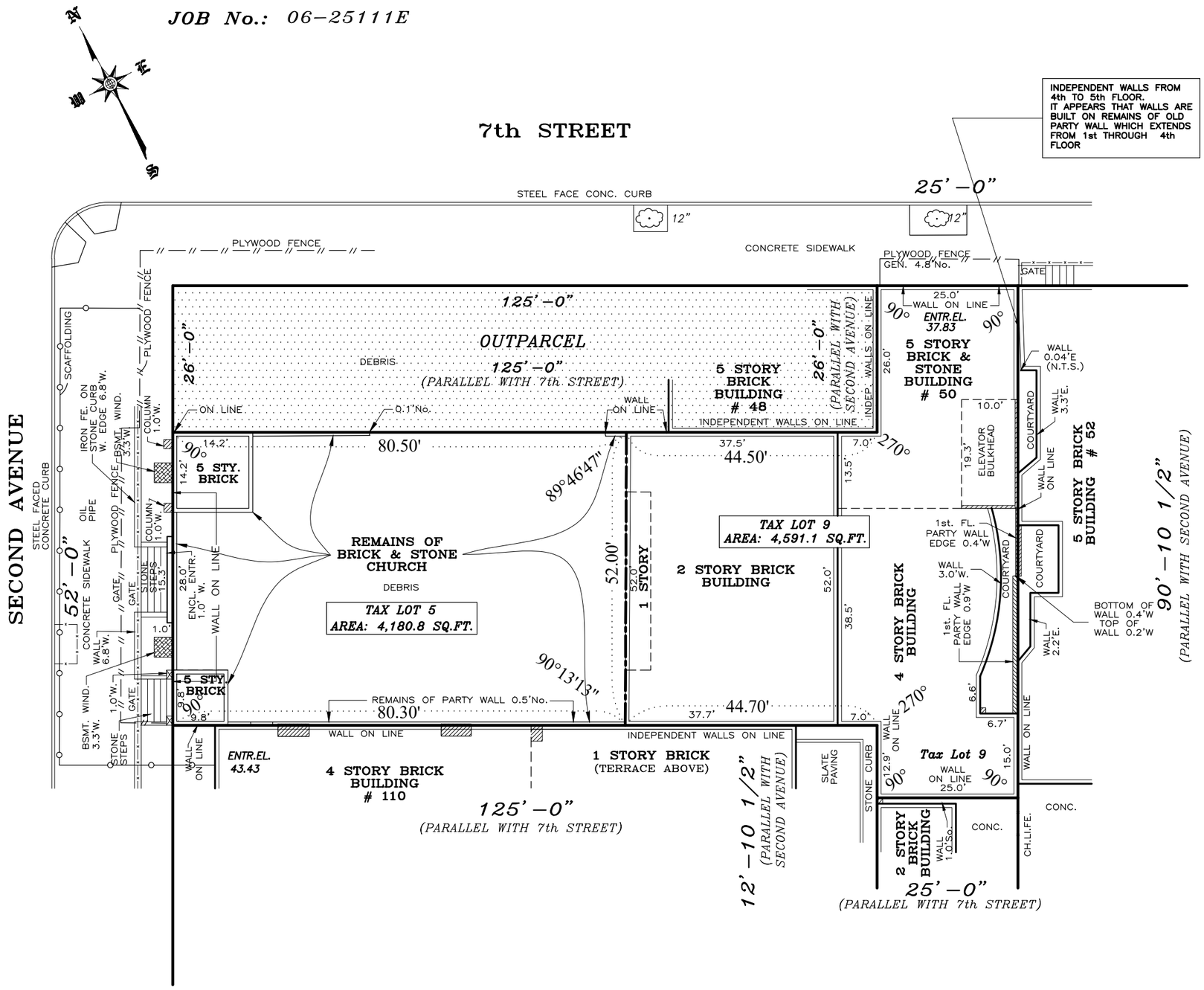

SUBDIVISION

OF DESCRIBED PROPERTY

LOCATED AT:
BOROUGH OF MANHATTAN,
CITY AND STATE OF NEW YORK

TAX DESIGNATION:
BLOCK: 448, LOT(S): 5, 9

SURVEYED ON: MARCH 9, 2006
AMENDED ON: FEBRUARY 08, 2012
MARCH 1, 2023 (UPDATE & DATUM CONVERTED)
MARCH 9, 2023 (ELEVATOR BULKHEAD SHOWN)
OCTOBER 27, 2023 (SUBDIVISION)

DRAWN BY: FK/M.K./AH	CHECKED BY: AT

THE EXISTENCE OF RIGHT OF WAYS AND/OR EASEMENTS OF RECORD, IF ANY, NOT SHOWN ARE NOT CERTIFIED.

THE OFFSETS OR DIMENSIONS SHOWN FROM THE STRUCTURES TO THE PROPERTY LINES ARE FOR A SPECIFIC PURPOSE AND USE AND THEREFORE ARE NOT INTENDED TO GUIDE THE ERECTION OF FENCES, RETAINING WALLS, POOLS, PLANTING AREAS, ADDITIONS TO STRUCTURES AND ANY OTHER CONSTRUCTION.

UNAUTHORIZED ALTERATION OR ADDITION TO THIS SURVEY IS A VIOLATION OF SECTION 7209 OF THE NEW YORK STATE EDUCATION LAW.
COPIES OF THIS SURVEY MAP NOT BEARING THE LAND SURVEYOR'S INKED SEAL OR EMBOSSED SEAL SHALL NOT BE CONSIDERED TO BE A VALID TRUE COPY.

CERTIFICATION INDICATED HEREON SHALL RUN ONLY TO THE PERSON FOR WHOM THE SURVEY IS PREPARED, AND ON HIS BEHALF TO THE TITLE COMPANY, GOVERNMENTAL AGENCY AND LENDING INSTITUTION LISTED HEREON, AND TO THE ASSIGNEES OF THE LENDING INSTITUTION. CERTIFICATIONS ARE NOT TRANSFERABLE TO ADDITIONAL INSTITUTIONS OR SUBSEQUENT OWNERS.

ALEXANDER TSUKERMAN N.Y.S. L.S. № 050189

20 0 20 40 60

Scale 1" = 20'

LEONARD J. STRANDBERG AND ASSOCIATES,
CONSULTING ENGINEERS AND LAND SURVEYORS, P.C.
32 SMITH STREET, FREEPORT, NY 11520
516-378-2064 ° 212-213-4090 ° FAX 516-378-6649
EMAIL: INFO@LJSPC.COM

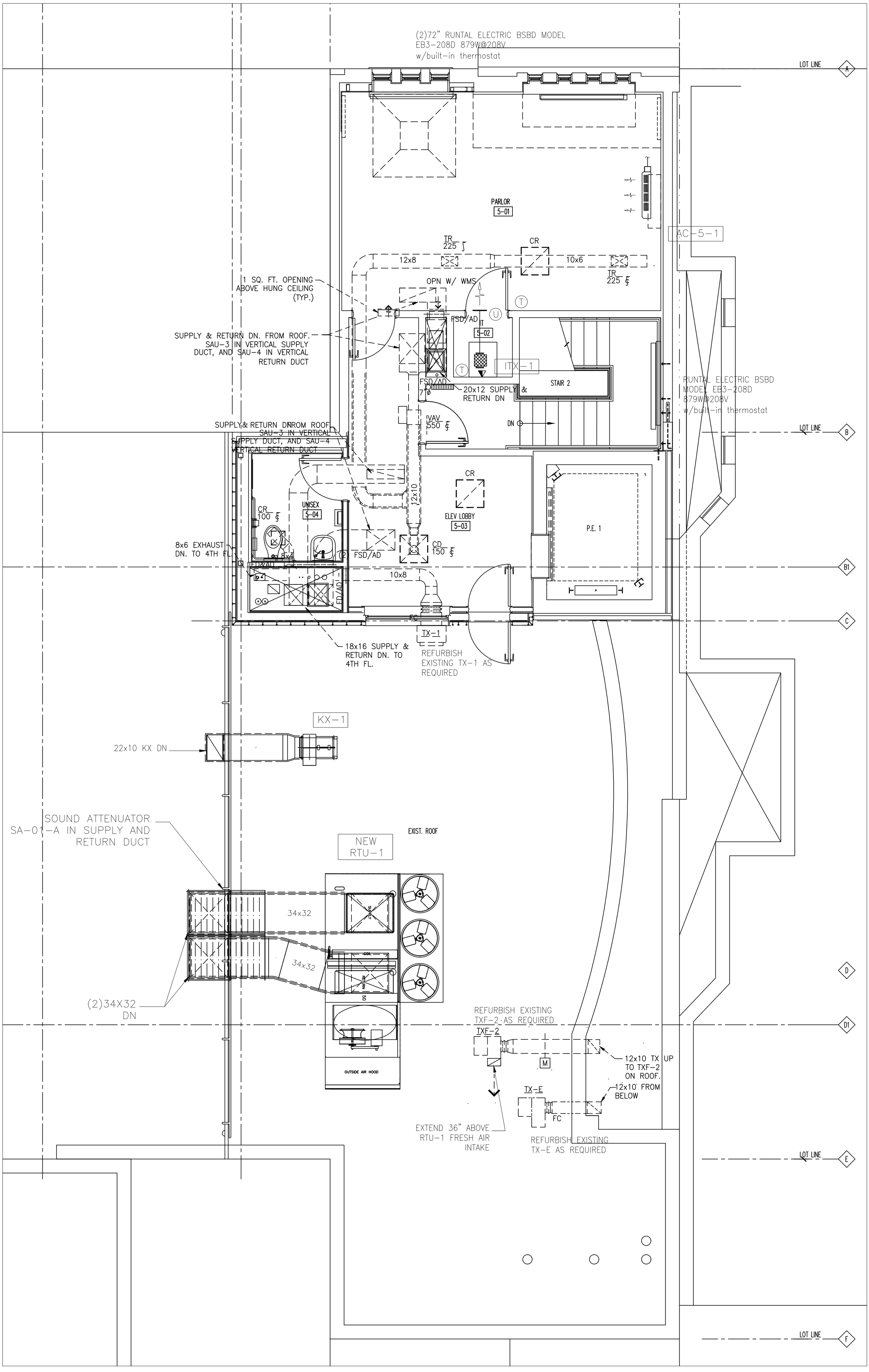
(2)72" RUNTAL ELECTRIC BSBD MODEL
EB3-208D 879W@208V
w/built-in thermostat
LOT LINE
A
PARLOR
5-01
AC-5-1
TR
225
CR
12x8
10x6
1 SQ. FT. OPENING
ABOVE HUNG CEILING
(TYP.)
OPN W/ WMS
FSD/AD
5-02
SUPPLY & RETURN DN. FROM ROOF.
SAU-3 IN VERTICAL SUPPLY
DUCT, AND SAU-4 IN VERTICAL
RETURN DUCT
ITX-1
STAIR 2
20x12 SUPPLY &
RETURN DN
RUNTAL ELECTRIC BSBD
MODEL EB3-208D
879W@208V
w/built-in thermostat
VAV
550
DN
LOT LINE
B
SUPPLY & RETURN DN FROM ROOF
SAU-3 IN VERTICAL
SUPPLY DUCT, AND SAU-4
VERTICAL RETURN DUCT
CR
UNISEX
5-04
CR
100
12x10
ELEV LOBBY
5-03
P.E. 1
8x6 EXHAUST
DN. TO 4TH FL.
8x4
FSD/AD
CD
150
B1
10x8
FD/AD
FC
C
TX-1
18x16 SUPPLY &
RETURN DN. TO
4TH FL.
REFURBISH
EXISTING TX-1 AS
REQUIRED
KX-1
22x10 KX DN
SOUND ATTENUATOR
SA-01-A IN SUPPLY AND
RETURN DUCT
EXIST. ROOF
NEW
RTU-1
34x32
SUPPLY
COIL
RETURN
SO
34x32
D
(2)34X32
DN
REFURBISH EXISTING
TXF-2 AS REQUIRED
TXF-2
D1
M
12x10 TX UP
TO TXF-2
ON ROOF.
12x10 FROM
BELOW
TX-E
FC
EXTEND 36" ABOVE
RTU-1 FRESH AIR
INTAKE
REFURBISH EXISTING
TX-E AS REQUIRED
LOT LINE
E
LOT LINE
F

CTA ARCHITECTS P.C.
151 West 26th Street - 8th Floor
New York, New York 10001-6810
Tel: 212.243.7404 info@ctaarchitects.com

OWNER:
MIDDLE COLLEGIATE CHURCH
50 EAST 7TH ST
NEW YORK, NY 10003
TEL (212) 477-0666

STRUCTURAL ENGINEER:
THE EIPEL ENGINEERING GROUP DPC
307 SEVENTH AVE, SUITE 1805
NEW YORK, NY 10001
(212) 695-5120

KITCHEN CONSULTANT:
THE SAM TELL COMPANIES
36 E 31ST ST, 6TH FLOOR
NEW YORK, NY 10016
(917) 642-9379

INTERIOR DESIGN CONSULTANT:
EVERICK BROWN DEISGN
(914) 602-8918

MEP ENGINEER:
MOTTOLA RINI ENGINEERS
10 E 23RD ST SUITE 510,
NEW YORK, NY 10010
TEL (212) 627-7299

LIGHTING CONSULTANT:
LIGHTICRAFT GROUP
200 LIBERTY ST, SUITE 302
NEW YORK, NY 10281
TEL (212) 626-0133

AV/ACOUSTICS/IT/SECURITY CONSULTANT:
SHEN MILSON & WILKE LLC
275 MADISON AVE
NEW YORK, NY 10016
(212) 725-6800

DATE	REVISION	NO.
10/17/23	ISSUE FOR CONSULTANTS	1

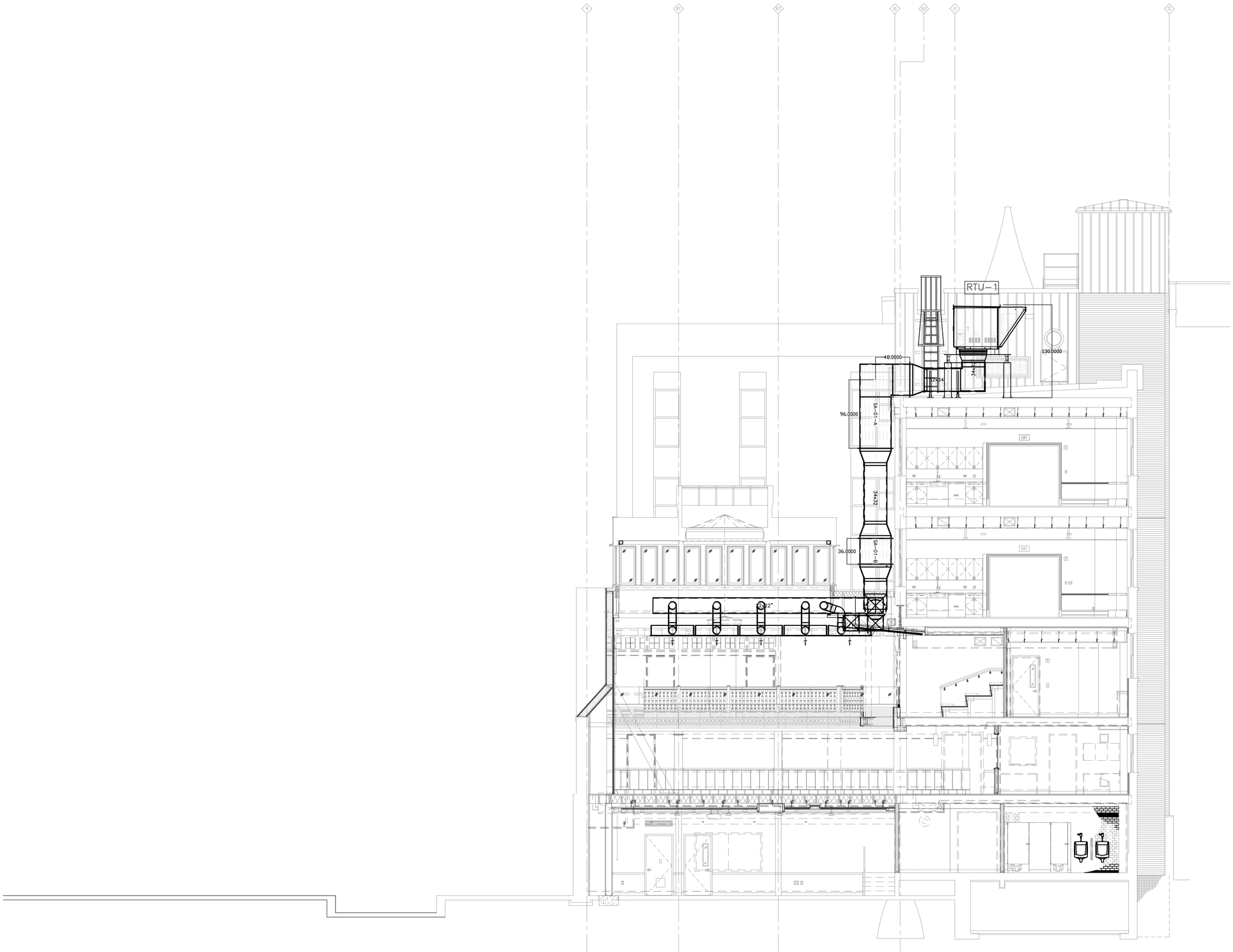

1 CROSS SECTION A
SCALE: 1/4"=1'-0"

KEY PLAN

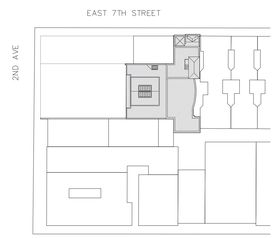

PROJECT:
MIDDLE COLLEGIATE CHURCH
50 E 7TH ST, NEW YORK, NY 10003

DRAWING TITLE:
CROSS SECTION A CONSTRUCTION

SEAL & SIGNATURE:

DATE:	10/06/2023
PROJECT No:	23203
DRAWING BY:	XX
CHECKED BY:	XX
DWG No:	A-600.00
CADD FILE No:	OF X

NEW RTU
NEW SKYLIGHT
NEW DUCTS
NEW KITCHEN EXHAUST DUCT
NEW METAL SIDING TO MATCH EXISTING
NEW GUARDRAIL
NEW CLEAR GLAZING CLERESTORY WINDOWS

NEW GOOSE NECK ELBOWS
EXISTING 8 TON VRF UNIT
NEW SKYLIGHT

NEW KITCHEN EXHAUST DUCT
NEW RTU/DUNNAGE
NEW DUCTS
NEW GUARDRAIL
NEW SKYLIGHT
NEW CLEAR GLAZING CLERESTORY WINDOWS
NEW METAL SIDING TO MATCH EXISTING
E 7 St
ONE WAY
DANGER

RN SERIES
C - CABINET WITH ECONOMIZER ~ 16-30 TON
ENERGY RECOVERY SECTION AND POWER EXHAUST

CLEARANCES

LOCATION	• UNIT SIZE • 16 - 30 TON
OUTSIDE AIR (BACK)	48
CONTROLS SIDE (FRONT)	48
LEFT SIDE	6
RIGHT SIDE	60
TOP	UNOBSTRUCTED

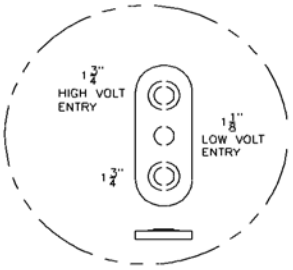

DETAIL A

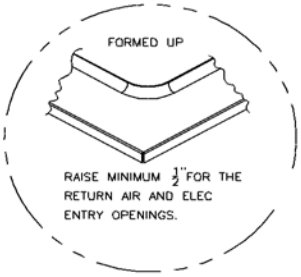

DETAIL B

NUMBER OF CONDENSER FANS

16,18 & 20 TON - 2 FANS

25 & 30 TON - 3 FANS

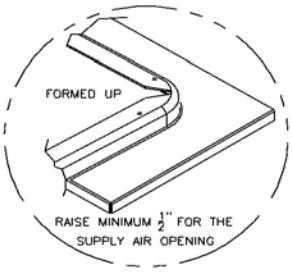

DETAIL C

TOP VIEW

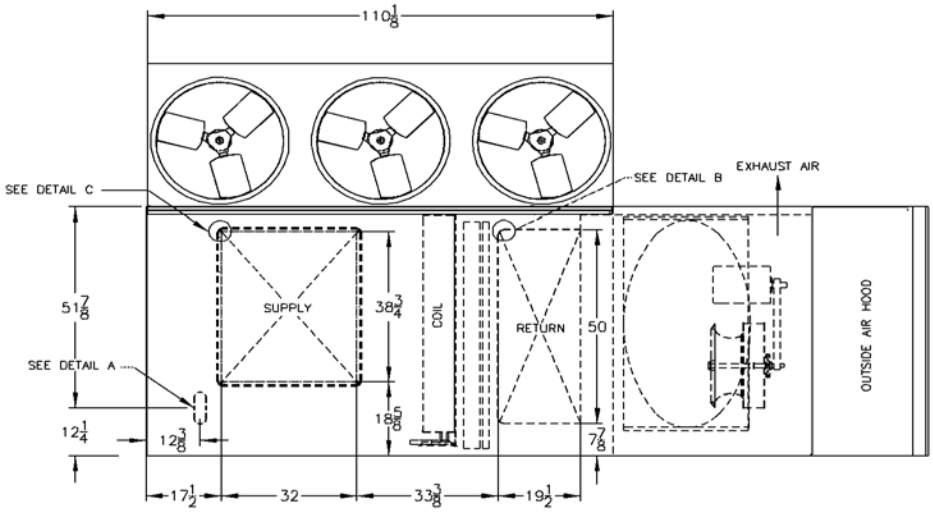

FRONT VIEW

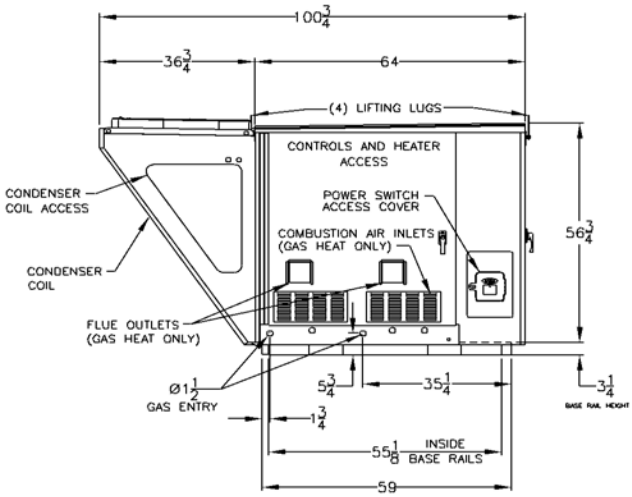

RIGHT SIDE VIEW

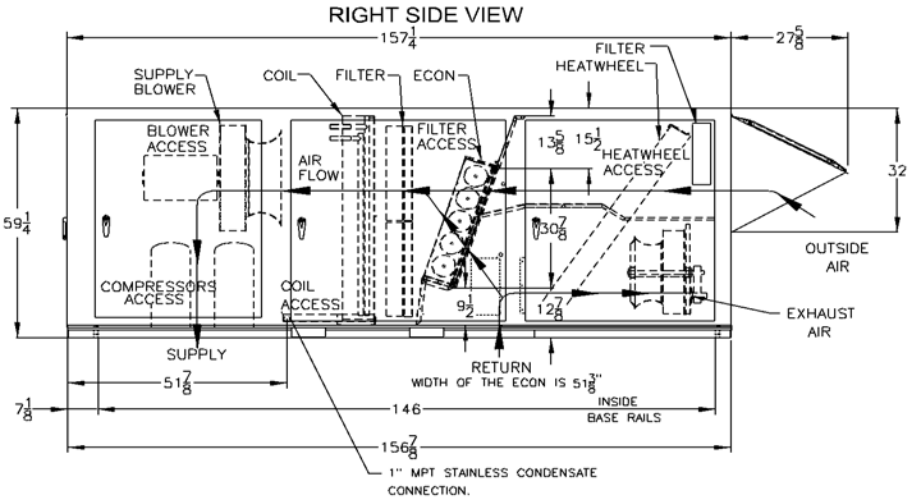

RNC-00005 REV:D 12/27/22

NOTE: ALL DIMENSIONS ARE IN INCHES

RNC CABINET
AIR COOLED CONDENSING UNIT
WITH ENERGY RECOVERY SECTION

RN-030-8-0-EB09-38B:UELC-Q0H-DEM-AGA-0DECLYD-00-HJE0000VB

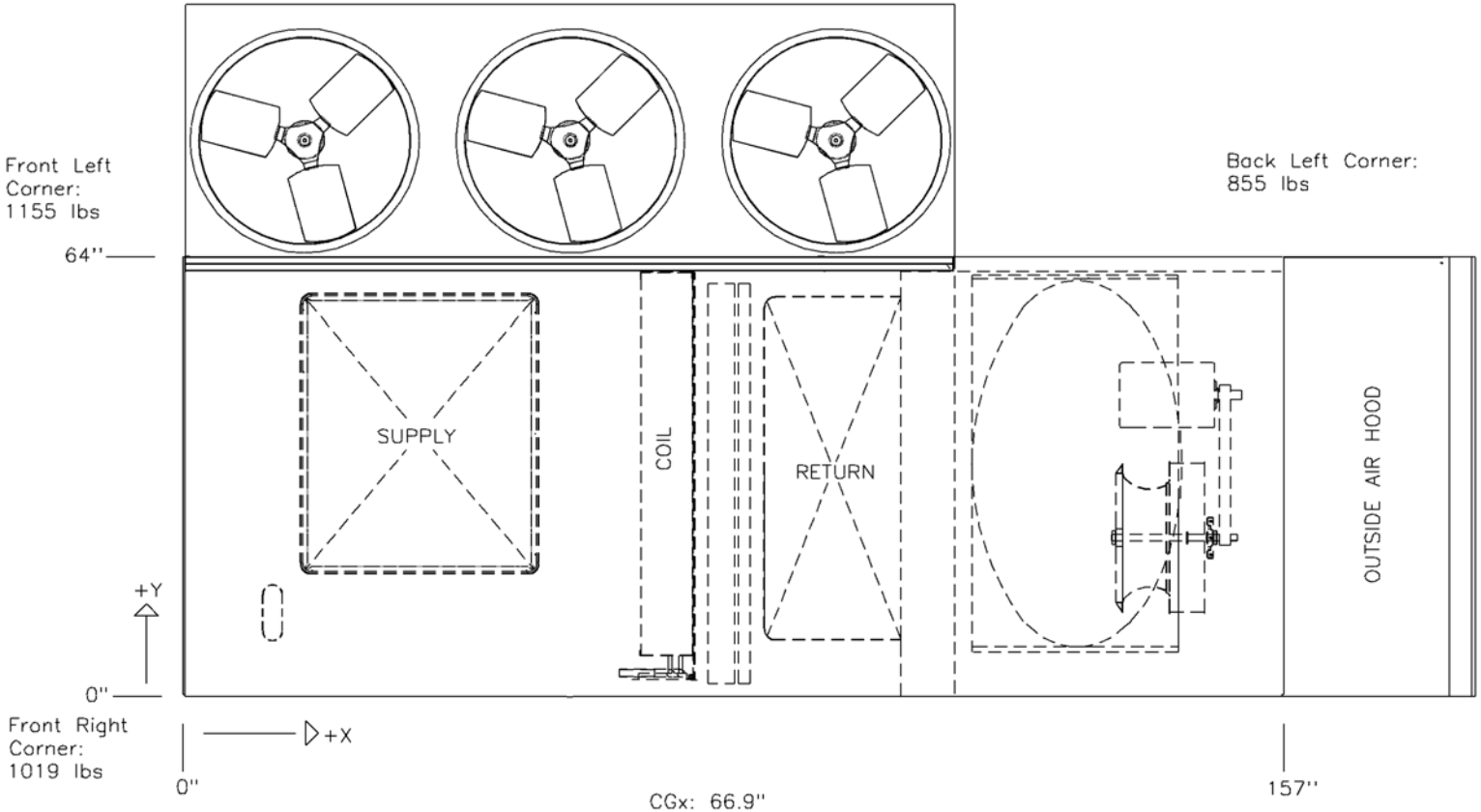

CGx: 66.9''
CGy: 34.1''

Total Weight:
3784 lbs (±5%)

Disclaimer:
This weight estimate does not account for any SPAs.

AAON
WARNING

2 AV
E 7 St
ONE WAY
ONE WAY
EAST RIVER GREENWAY
DETOUR
SOUTH
WORK ZONE
U-HAUL
SIDEWALK
CLOSED
ONE WAY
LANE
CLOSED
AHEAD
TRITON
CONTRACTING

NO TRESPASSING
CONSTRUCTION AREA
JOIN US
SUNDAYS | 11:45 A.M.
at EAST END TEMPLE
245 E. 7th St.
DANGER
CONSTRUCTION AREA
NORTHEAST
EXTERIOR DEMOLITION